JOHN ZINK HAMWORTHY COMBUSTION®

CPF™ Low NOx Burner

For Low Excess Air Operation



Lower Excess Air, Reduced Fuel Costs

The CPF dual–fuel burner can fire gas and oil, and is specifically designed for low excess air operation in single or multiple burner applications. With no adjustable or moving parts under normal conditions, it delivers reliable operation over wide and rapid load changes.

The CPF burner provides complete combustion with low excess air. Combustion air is distributed evenly into the fuel stream, directed through bellmouth assemblies at a velocity that produces uniform flow as it passes in parallel streams through the burner. A uniquely designed stabilizer (swirler) enhances the anchoring of the flame front. Depending on combustion air temperatures, modifications ranging from simple insulation to the use of stainless steel construction ensure long, dependable burner operation.

The innovative design of our CPF burner enables firing with as low as 5% excess air.
That's smart. That's JZHC.

The Flexibility of Single or Multi-Burner Firing

CPF burners can be arranged to accommodate a wide range of furnace configurations while providing an optimum flame shape. Our unique design utilizes two bellmouths to direct air into the combustion zone providing even air distribution, even at low excess air levels. On multiple burner applications, each CPF burner can be equipped with an integral sliding damper and pneumatic cylinder. Each liquid fuel atomizer can be equipped with an automatic–retract assembly.

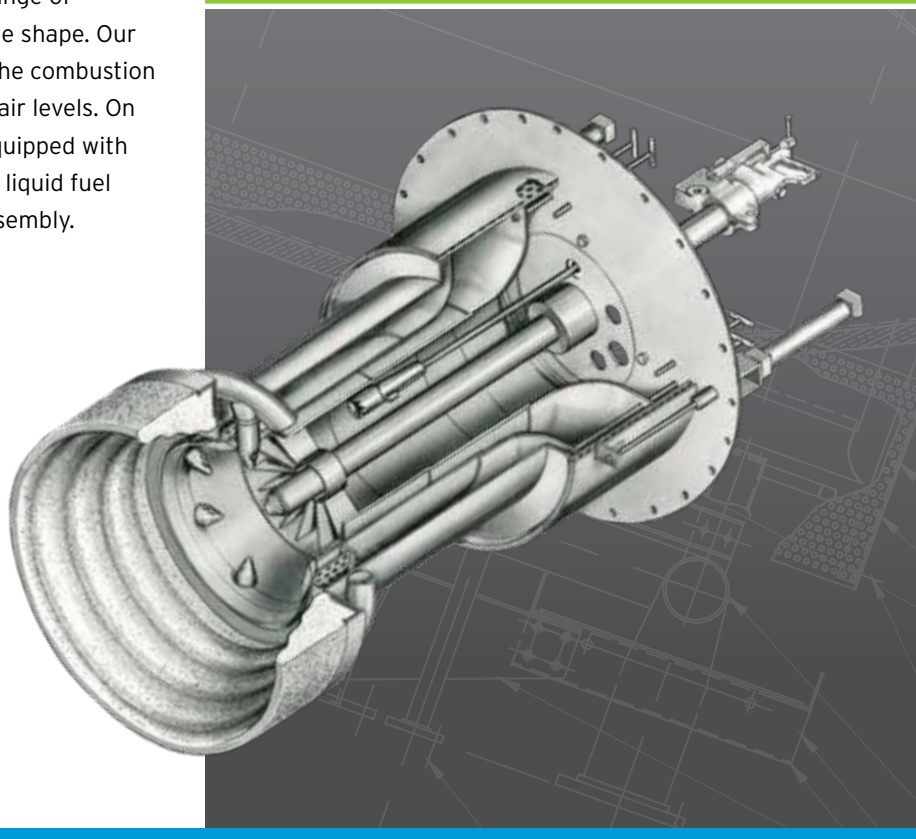

At A Glance

+ Low excess air operation – capable of firing with as low as 5% excess air
+ Low stack particulate emission
+ Adjustable flame shaping
+ Wide operating range
+ No moving parts under normal operation
+ Fuel flexibility – firing of liquid and gaseous fuels

Research and Development

Continuous innovation is a vital part of our on-going success. We invest heavily in facilities, capabilities, and people. Our Research and Development Test Center is the largest and most advanced testing complex of its kind. This not only allows us to push innovation for future solutions, it enables us to test customer equipment in an industrial setting under specific, real-world conditions.



RESEARCH AND DEVELOPMENT TEST CENTER

Low NOx Design Capability

The CPF burner can incorporate flue gas recirculation (FGR) to reduce NOx, with a minimal impact on operating excess air levels and flame shape. Due to the burner's unique ability to uniformly mix together flue gas and combustion air, it can achieve stable low excess air operations, low NOx and minimum CO and PM emissions.

Other methods of NOx reduction are also available depending upon application. Our experts can determine which method of NOx reduction is most economical for your particular installation.



CPF BURNER FIRING END

Engineering and System Responsibility

We offer complete system engineering services, including turnkey installation if desired. Whether a retrofit or new steam generation system installation, you'll benefit from reliable burner solutions and engineering expertise that is trusted worldwide. To ensure your specific system needs are met, our engineers will:

+ Review individual job requirements for proper system design.
+ Evaluate the types of fuels to be fired for optimum burner performance.
+ Evaluate control and instrumentation needs for system reliability.

Contact us today

about the CPF burner or other low NOx and ultra-low NOx technologies that can offer significant financial and performance benefits.

This literature is not intended as advertising, as such term is defined in 16 CCR section 7027, for general contracting services in the State of California or any other jurisdiction with similar restrictions where John Zink is not currently licensed. Please contact us for more specific information on John Zink's availability in your state.



GLOBAL REACH

JZHC has locations all over the map, with thousands of employees worldwide.

JOHN ZINK HAMWORTHY COMBUSTION®

COEN®

Koch Chemical Technology Group S. de R.L. de C.V.
Av. Juarez No. 40-106 | Col. Ex-Hacienda de Santa Monica
Tlalnepantla Edo. de Mexico C.P. 54050

johnzinkhamworthy.com | +52 55 5384 1390
To locate an office in your region, visit johnzinkhamworthy.com/contacts/office-locator

©2018 John Zink Company LLC. For information on patents and trademarks, see johnzinkhamworthy.com/legal-notices

COEN-18-81065